Note: Dimensions may vary by plus or minus 2.5% due to the rotational moulding process.

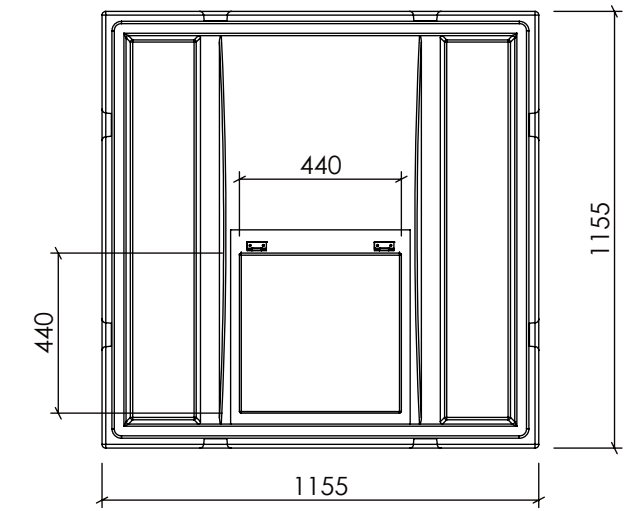

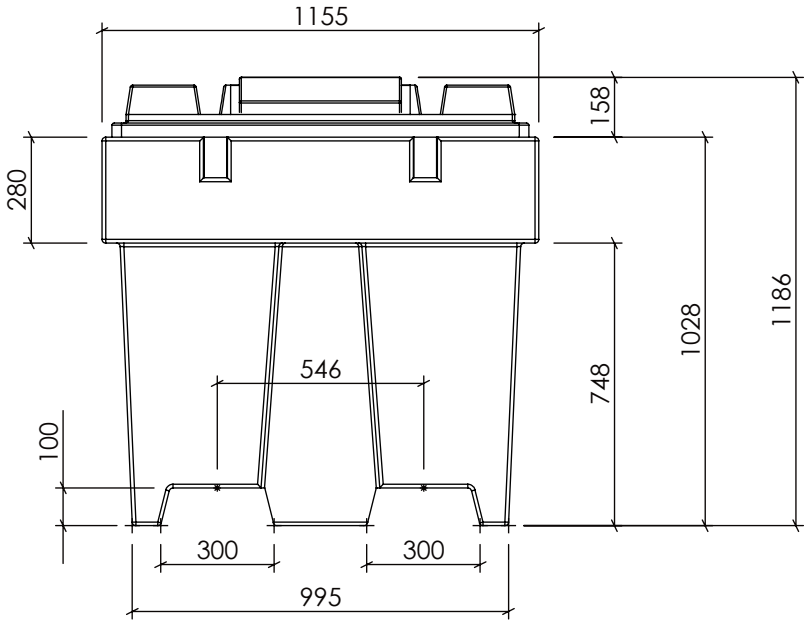

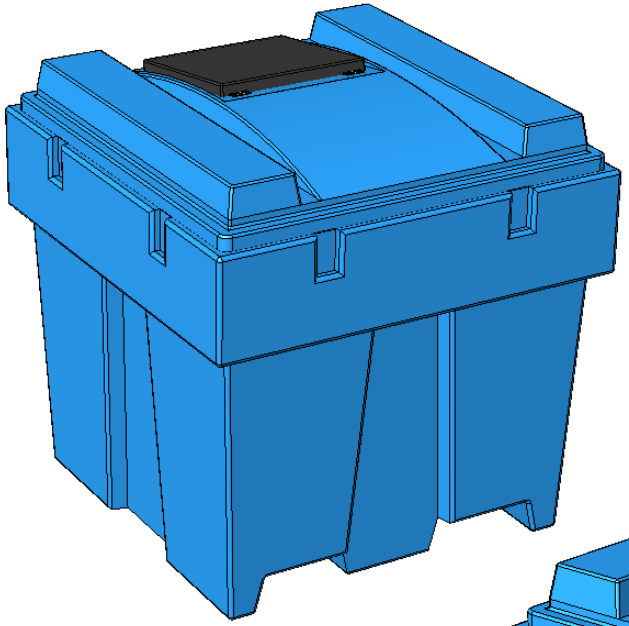

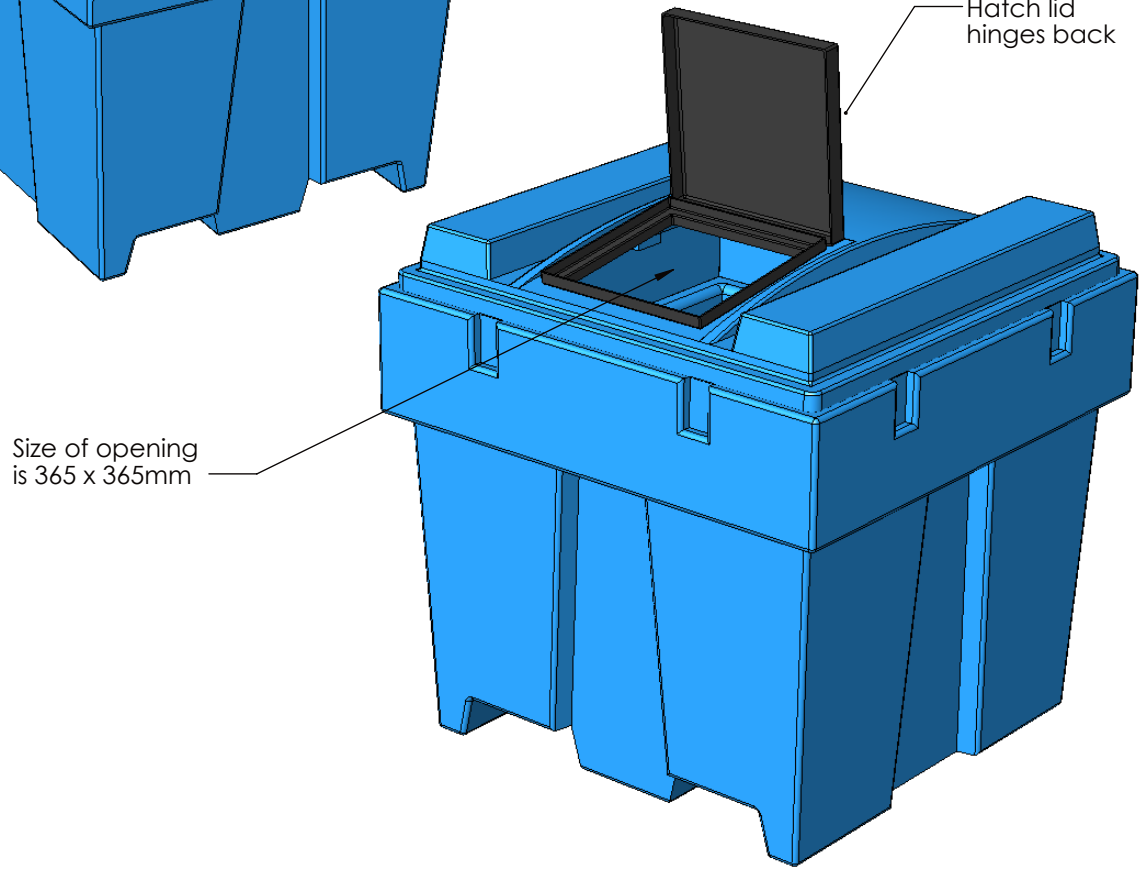

No.	DATE	BY	DESCRIPTION	GOUGH
			REVISION	APPROV.

GOUGH PLASTICS
Custom Rotational Moulders

Gough Industries Pty. Ltd.
833 Ingham Road
Bohle, Townsville
P.O. Box 7570, Garbutt BC, Qld. 4814.
Telephone 07 47747606
Facsimile 07 47747608
A.C.N. 010 028 547

This drawing remains the property of Gough Industries Pty. Ltd. It is subject to Gough Industries Pty. Ltd.'s recall and must not be reproduced in part or whole or it's contents divulged to third parties without prior written approval from Gough Industries Pty Limited.

	Signature	Date
DRAWN	D.HOLLIER	23.11.09
DRN. CHK		
ENGINEER		
ENG. CHK		
Eng. APPROVAL		
CONTROLLED DOCUMENT		NO

1000L CUBE

SQUARE HATCH LID

SCALE 1:50 | A4 | Gough Plastics Drg. No. 1000LT CUBE_Optional Square Hatch | REV

CAD FILE : S:\Products\Engineering\1000L Cube\Solidworks Models\